C–Board Schematics (CT–27SF12T/T1; CT–2742SFT/T1; & CT–F29L7T/LT/VT)

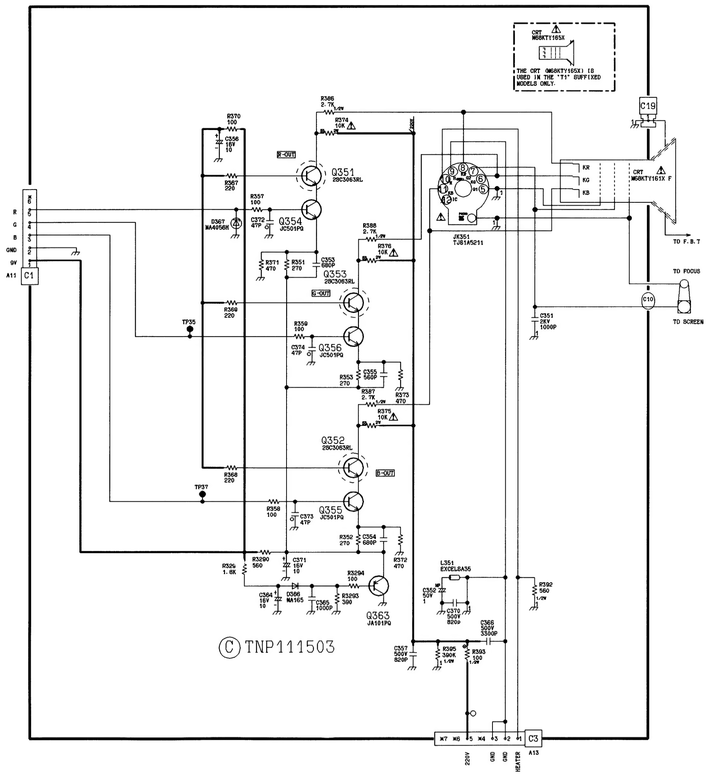

Voltage Chart – CRT–Board

(CT–27SF12T;CT–F29L7T/LT/VT;CT–2742SFT)

Transistors

Ref.	b	c	e
Q351	8.8	158.0	8.4
Q352	8.8	164.7	8.4
Q353	8.8	160.5	8.4
Q354	2.7	8.4	2.4
Q355	2.6	8.4	2.2
Q356	2.7	8.4	2.3
Q363	1.4	0	2.1

C–Board Schematics (CT–27XF12CT)

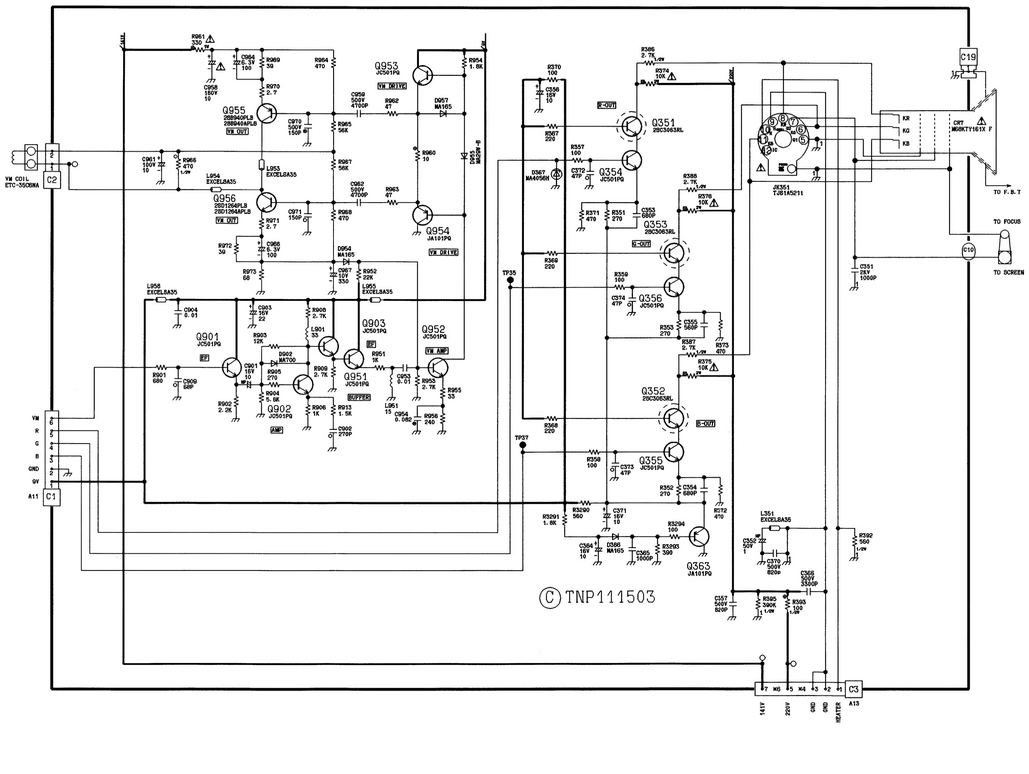

Voltage Chart – CRT–Board

(CT–27XF12CT)

Transistors

Ref.	b	c	e
Q351	8.7	143.6	8.4
Q352	8.7	151.1	8.4
Q353	8.7	154.7	8.4
Q354	3.0	8.4	2.6
Q355	2.8	8.3	2.4
Q356	2.7	8.4	2.4
Q363	1.4	0	2.1
Q901	5.5	8.8	4.8
Q902	1.6	5.2	1.0
Q903	5.2	8.8	4.6
Q951	4.5	8.8	3.9
Q952	0.9	5.4	0.3
Q953	6.6	8.8	6.0
Q954	5.4	0	6.0
Q955	137.6	69.9	138.0
Q956	0.8	69.9	0.4

IMPORTANT SAFETY NOTICE

THIS SCHEMATIC DIAGRAM INCORPORATES SPECIAL FEATURES THAT ARE IMPORTANT FOR PROTECTION FROM X–RADIATION, FIRE AND ELECTRICAL SHOCK HAZARDS. WHEN SERVICING IT IS ESSENTIAL THAT ONLY MANUFACTURERS SPECIFIED PARTS BE USED FOR THE CRITICAL COMPONENTS DESIGNATED WITH A ⚠ IN THE SCHEMATIC.